https://www.powermastersemi.com

POWER MASTER SEMICONDUCTOR

Power Master Semiconductor's product portfolio covers high and medium voltage solutions for converters and inverters especially in energy, cloud, xEV, and industrial applications.

WE ARE PROVIDING

ENERGY EFFICIENT POWER SOLUTIONS

COMPANY HISTORY

Power Master Semiconductor was founded in January 2018 by a group of experts with more than 20 year's experience of design, process, application and marketing area at leading semiconductor companies. Power Master Semiconductor is the Korean integrated power device manufacturer with FAB and R&D center in Korea.

To provide price performance solution at power market, which some of the leading companies dominate, we will continuously launch new products especially in the efficiency required market such as server / telecom, renewable energy, industrial and electric vehicle applications.

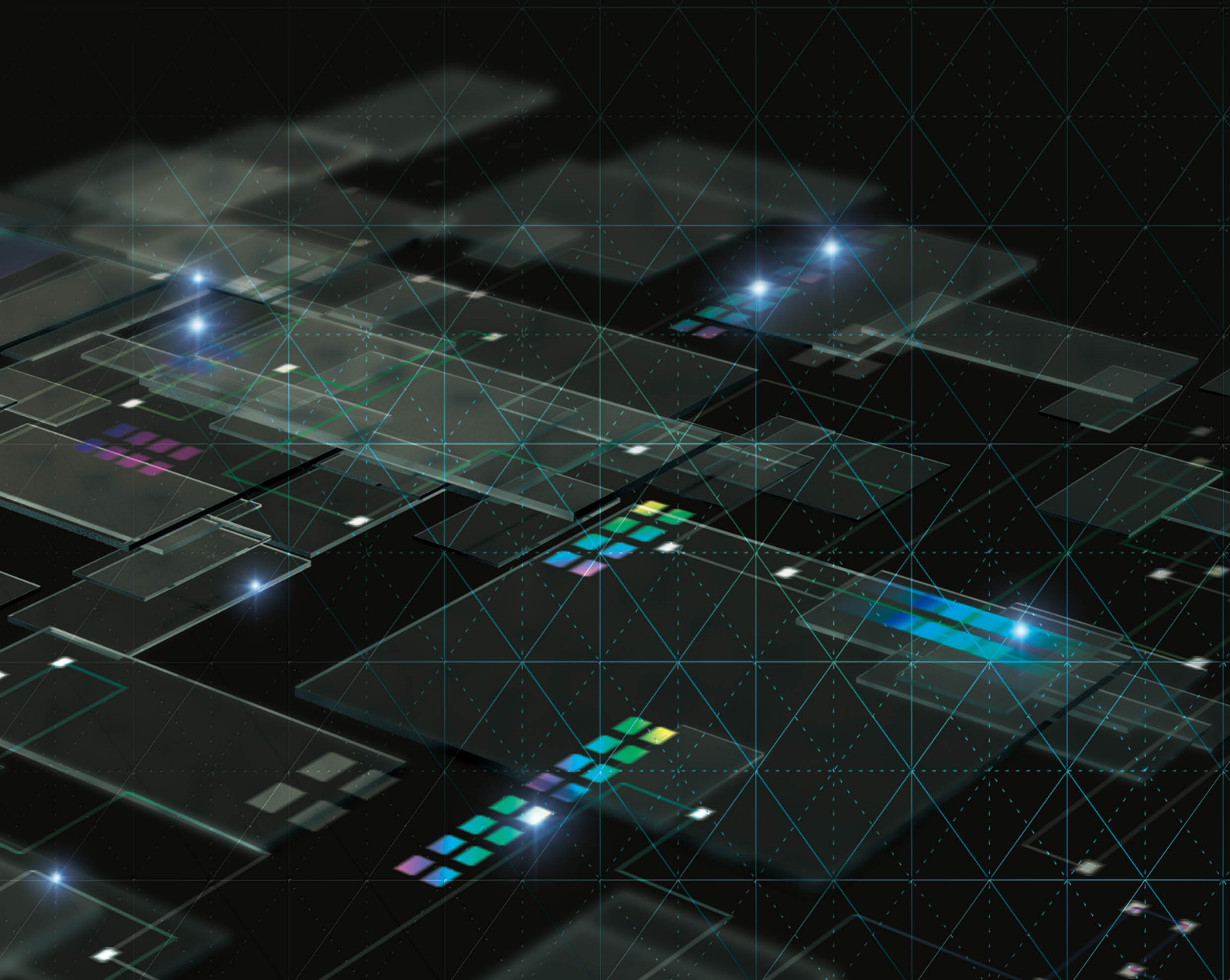

CHEONGJU HEADQUATERS

- SiC / Si FAB

- **Technology**
  - 6" SiC : SiC MOSFET & Diode (100μm thinning & STM Process)
  - 8" Si : SJ MOSFET (Pillar and Surface Process, Pt Process) / MV MOSFET (Trench Gate Process)
- **Land / Factory size**
  19,800m² (6,000 Pyeong) / 11,468.5m² (3,475 Pyeong)
- **Employees**
  ~ 150 (as of June 2022)
- **Certification**
  IATF 16949 & ISO 9001 Certification (Aug. 24, 2021),
  ISO 14001 Certification (Sep.15 , 2021)
- **Address**
  79-20, Gwahaksaneop 4-ro, Oksan-myeon, Heungdeok-gu, Cheongju-si, Chungcheongbuk-do, Republic of Korea

2018

Established
FAB_HQ : Cheongju
R&D : Bucheon

2019

Launched and mass-production
600V Super Junction MOSFET,
eMOS 7 Series

2020

Set up a mass production line
For the whole SiC Process
at the Cheongju FAB

2021

Launched and mass-production
650V/1200V SiC Diode,
eSiC Diode Series

2022

Launched 1200V SiC MOSFET,
eSiC MOSFET Series

FROM DESIGN TO MANUFACTURE

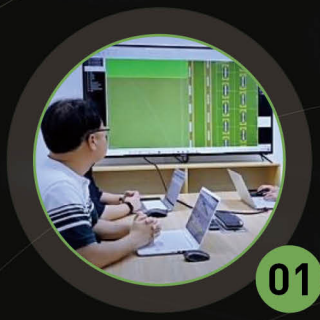

01 Design Center

02 Application Engineers in Expertise

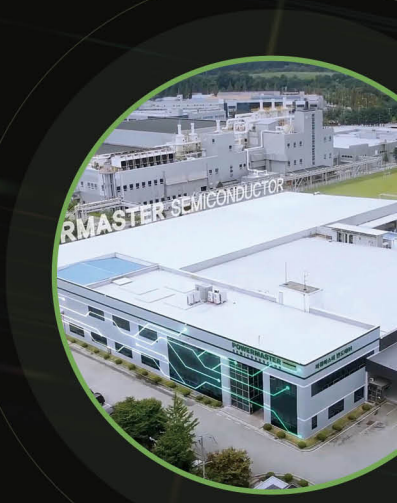

03 MES

04 8 inch Silicon (Si)

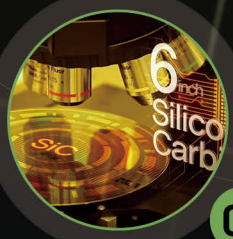

05 6 inch Silicon Carbide (SiC)

01 Design Center

- Develop leading-edge Si and SiC technology, and define new devices and technology architectures.
- Develop methodologies for the continuous process/device improvement and reliability verification.
- Perform device & process simulations.
- Work with cross-functional teams to certify processes, and qualify new products.
- Actively contribute to roadmaps and future technology brainstorming discussions.

02 Application Engineers in Expertise

- Provide system solution by application support to help customer's R&D efficiency and time-to-market.
- Develop application-oriented power devices.
- Provide outstanding technical support to customers.
- Provide technical seminar for customers.

03 MES [Manufacture Execution System]

- Complete visibility, control and manufacturing optimization of production through MES to ensure product quality and efficiency of the manufacturing process, proactively and systematically enforced.

04 8 inch Silicon (Si)

- Stacked EPI technology
- Wafer Thinning process
- Life time control process (E- irradiation, Platinum Diffusion)

05 6 inch Silicon Carbide(SiC)

- High Temperature / High Current implantation
- High Temperature Anneal / HT Oxidation
- Exclusive SiC Trench technology
- Wafer Thinning process below 100μm
- STM process

PROCESS TECHNOLOGY CAPABILITIES

- Ion Implantation process at High Temperature
- Trench Etching Technology
- Gate oxide process over 1500°C
- Activation process
- Wafer Thinning process below 100μm
- STM process

- Internalized a consistent process from EPI, wafer thinning to backside metal deposition
- Electron irradiation process
- Platinum deposition process

CERTIFICATIONS

POWERMASTER SEMICONDUCTOR CO., LTD.

79-20, Gwahaksaneop 4-ro, Oksan-myeon
Heungdeok-gu, Cheongju-si, Chungcheongbuk-do, 28122
Republic of Korea

Date: 2021.08.17

Letter of conformance

Dear Sir or Madam,

Having conducted the certification audit referring to the Quality Management System of your organization and having verified the implementation of the corrective actions, we are pleased to inform you that the Quality Management System of

POWERMASTER SEMICONDUCTOR CO., LTD.,
79-20, Gwahaksaneop 4-ro, Oksan-myeon
Heungdeok-gu, Cheongju-si, Chungcheongbuk-do, 28122
Republic of Korea

Design and manufacturing of components for power semiconductor(SiC MOSFET and SiC Diode)

complies with the requirements of the International Automotive Standard IATF 16949:2016.

However, we cannot issue a certificate at the moment due to the fact that the production period within your organization is less than 12 months. By the time your organization has reached the twelve months of production or in case that it is verifiably listed in an active bid list of a customer requiring IATF 16949:2016 certification, DQS Holding GmbH will continue the certification process according to the rules for achieving IATF recognition.

This letter of conformance is valid for a twelve months period.

CB LoC-No.: 50350647 IATF16 KON
being the issue date: 2021-08-17
and the expiry date: 2022-08-16
LoC-No: 0417235 – LoC

The next audit in your company should be completed within this period.

Best regards

Nurani S. Venkatachalam
Director-Corporate Automotive Program, DQS Holding GmbH

Michael Drechsel
Managing Director, DQS Holding GmbH

IATF Contract Office: DQS Holding GmbH, Konrad-Adenauer-Allee 8-10, 61118 Bad Vilbel, Germany 1 / 2

IATF 16949

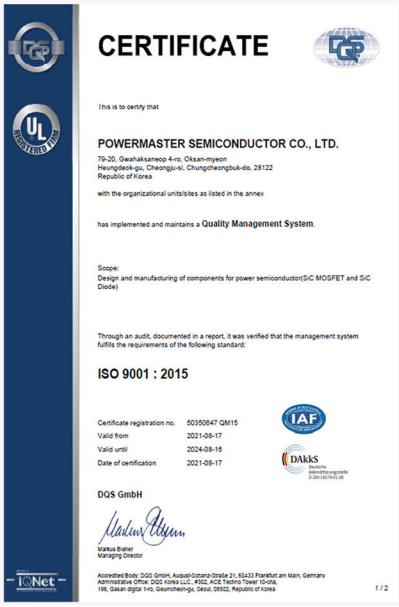

CERTIFICATE

This is to certify that

POWERMASTER SEMICONDUCTOR CO., LTD.

79-20, Gwahaksaneop 4-ro, Oksan-myeon
Heungdeok-gu, Cheongju-si, Chungcheongbuk-do, 28122
Republic of Korea

with the organizational units/sites as listed in the annex

has implemented and maintains a **Quality Management System**.

Scope:
Design and manufacturing of components for power semiconductor(SiC MOSFET and SiC Diode)

Through an audit, documented in a report, it was verified that the management system fulfills the requirements of the following standard:

ISO 9001 : 2015

Certificate registration no.	50350647 QM15
Valid from	2021-08-17
Valid until	2024-08-16
Date of certification	2021-08-17

DQS GmbH

Markus Bieher
Managing Director

Accredited Body: DQS GmbH, August-Schanz-Straße 21, 60433 Frankfurt am Main, Germany
Administrative Office: DQS Korea LLC., #302, ACE Techno Tower 10-cha,
196, Gasan digital 1-ro, Geumcheon-gu, Seoul, 08502, Republic of Korea 1 / 2

ISO 9001

CERTIFICATE

This is to certify that

POWERMASTER SEMICONDUCTOR CO., LTD.
Headquarter

79-20, Gwahaksaneop 4-ro, Oksan-myeon
Heungdeok-gu, Cheongju-si, Chungcheongbuk-do, 28122
Republic of Korea

with the organizational units/sites as listed in the annex

has implemented and maintains an **Environmental Management System**.

Scope:
Design, manufacturing and sales of components for power semiconductor(SiC MOSFET, SiC Diode and HV SJ MOSFET)

Through an audit, documented in a report, it was verified that the management system fulfills the requirements of the following standard:

ISO 14001 : 2015

Certificate registration no.	50350647 UM15
Valid from	2021-09-15
Valid until	2024-09-14
Date of certification	2021-09-15

DQS GmbH

Markus Bieher
Managing Director

Accredited Body: DQS GmbH, August-Schanz-Straße 21, 60433 Frankfurt am Main, Germany
Administrative Office: DQS Korea LLC., #302, ACE Techno Tower 10-cha,
196, Gasan digital 1-ro, Geumcheon-gu, Seoul, 08502, Republic of Korea 1 / 2

ISO 14001

POWER MASTER SEMICONDUCTOR'S PRODUCT PORTFOLIO

Power Master Semiconductor provides HV (SiC & SJ) & MV product solutions especially in energy, cloud, xEV and industrial applications.

Release 21 Q1~

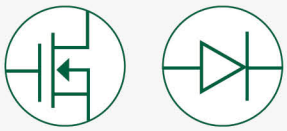

SiC MOSFET / SiC Diode

- Diode : 650V / 1200V / 1700V
- MOSFET : 650V / 1200V
- High Performance / High Ruggedness

Release 20 Q2~

SJ MOSFET

- 600 / 650V
- Efficient / Fast Recovery
- Well-balanced Performance between efficiency & easy of use

Release 23 Q1~

MV MOSFET

- 60V / 100 / 150 / 200V
- Low $R_{DS(ON)}$ / Low Q_G / High Ruggedness
- Smart Specification

Si & SiC APPLICATIONS

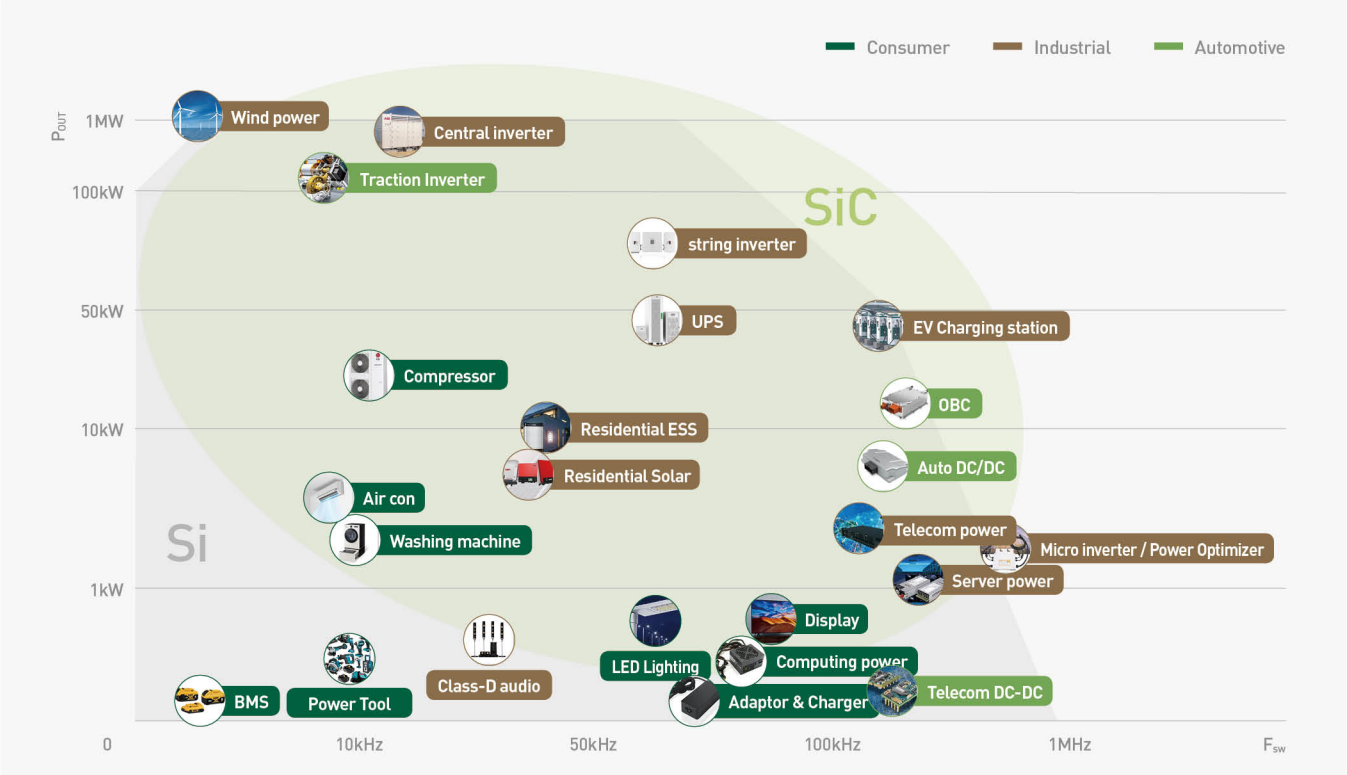

SiC & Si PROCESS SERVICE

6-INCH SILICON CARBIDE

6-inch SiC unit process
: Full process

01 High Temp Ion implant ▸ 02 High Temp Anneal ▸ 03 Front / Back Metal ▸ 04 Wafer Level Test

8-INCH SILICON

8-inch Si unit process
: EPI growth process

01 EPI Growing ▸ 02 Patterning ▸ 03 Ion Implant ▸ 04 EPI Growing

8-inch Si unit process
: Back-end process

01 Back Side Grind ▸ 02 Back Side Etch ▸ 03 Back Side Metal ▸ 04 Wafer Level Test

6-inch SiC FOUNDRY SERVICE

CAPABILITY

- CLEAN CLASS : CLASS 1
- CUSTOMER DEVELOPMENT & MANUFACTURING

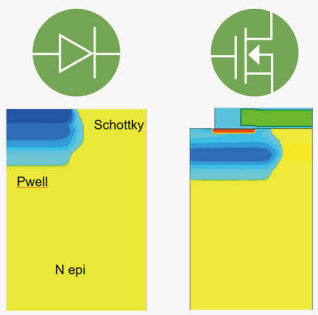

SIC Diodes SIC MOSFETs

Case 1. OEM - Customer Design + Power Master Semiconductor's Process Recipe

Product Design	Mask / Process Flow	Product Recipe	Wafer Manufacturing	Die Sorting	Assembly
Customer	Customer	PMS	PMS	Customer / PMS	Customer

Case 2. OEM - Customer Design + Customer Process Recipe

Product Design	Mask / Process Flow	Product Recipe	Wafer Manufacturing	Die Sorting	Assembly
Customer	Customer	Customer	PMS	Customer / PMS	Customer

Case 3. ODM - Power Master Semiconductor's Design & Process

Product Specification	Design / Mask	Product Recipe	Wafer Manufacturing	Die Sorting	Assembly
Customer	PMS	PMS	PMS	PMS	Customer

SiC PROCESS TECHNOLOGY CAPABILITIES

SiC Process Capabilities

- High Temperature Implant
- Photolithography
- High Temperature Implant Anneal
- High Temperature Oxidation

- SiC Trench etch
- Frontside Ni silicide and etch
- Metal Planarization
- SiC Wafer Thinning below 100μm

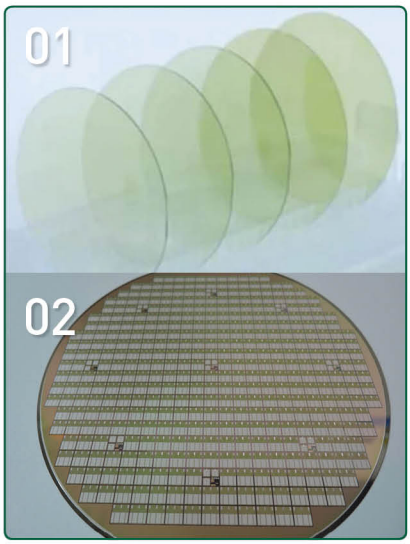

- Backside UV Laser Anneal
- Backside Metal Deposition
- Solderable Top Metal (STM) Process

OUR BEST SERVICES BY EXPERT TEAM

Experience Power Master's leading edge products
and superb application engineer's design support at fair price

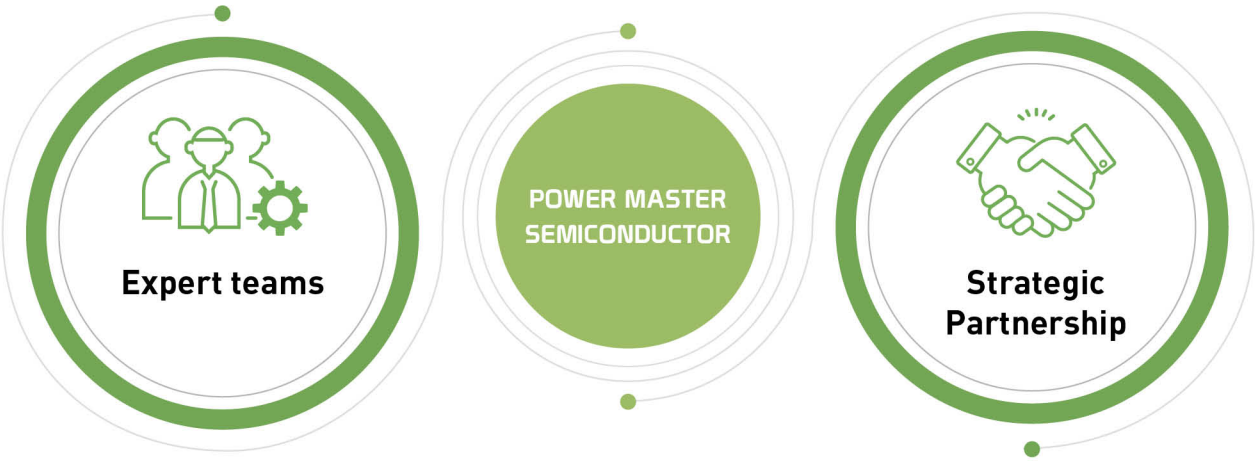

1200V *e*SiC MOSFET SERIES

Power Master Semiconductor's advanced *e*SiC MOSFET provides design flexibility for high system efficiency, higher switching frequency for system size reduction with higher reliability thanks to its extremely low switching losses, low FOM [Q_G x $R_{DS(ON)}$], no reverse recovery losses of body diode and high ruggedness.

Key Features

- Extremely low switching losses
- Low FOM ; Q_G x $R_{DS(on)}$
- Fast intrinsic diode
- Robust Avalanche Capability

Key Benefits

- Higher system efficiency / Reduced cooling effort
- Higher frequency applicability
- Increased power density
- Higher system reliability

Target Applications

Performance Benchmark

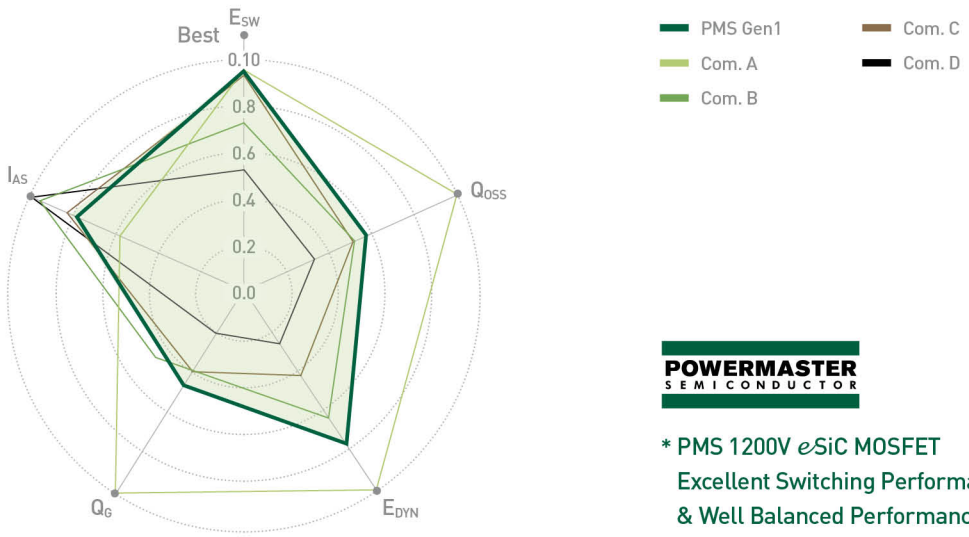

POWERMASTER SEMICONDUCTOR

* PMS 1200V *e*SiC MOSFET
Excellent Switching Performance
& Well Balanced Performance

*e*SiC MOSFET FOR INDUSTRIAL & AUTOMOTIVE APPLICATIONS

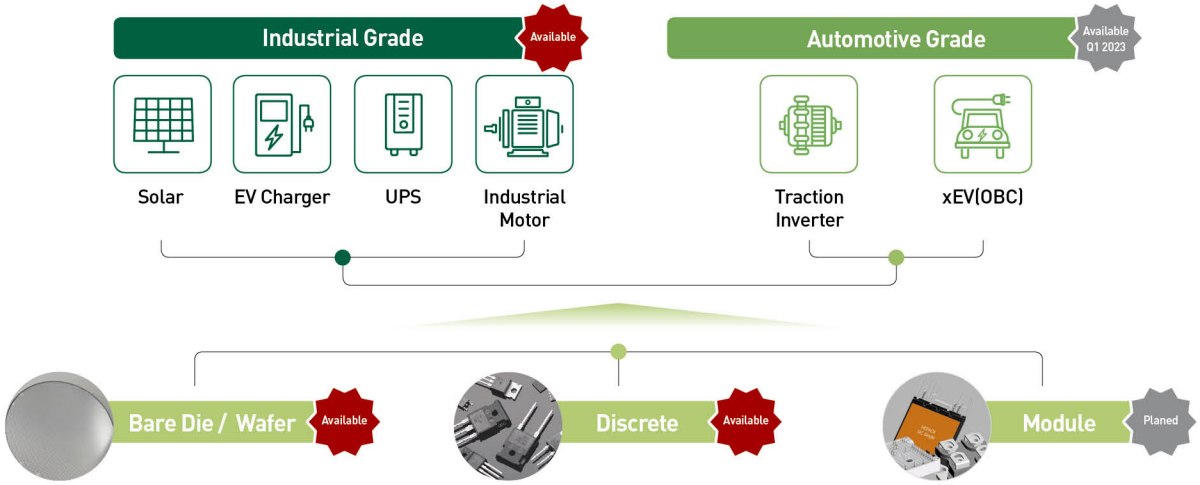

1200V / 650V eSiC MOSFET

1200V eSiC MOSFET

Solar | UPS | EV Charger | xEV(OBC)

PACKAGE / $R_{DS(ON)_typ}$	Die	D2PAK 7L	TO-247 3L	TO-247 4L
21mΩ	*PC0120N21M1	*PCBF120N21M1(-A)	*PCW120N21M1(-A)	*PCZ120N21M1(-A)
30mΩ	*PC0120N30M1	*PCBF120N30M1(-A)	*PCW120N30M1(-A)	*PCZ120N30M1(-A)
40mΩ	*PC0120N40M1	*PCBF120N40M1(-A)	*PCW120N40M1(-A)	*PCZ120N40M1(-A)
60mΩ	*PC0120N60M1	*PCBF120N60M1(-A)	*PCW120N60M1(-A)	*PCZ120N60M1(-A)
80mΩ	PC0120N80M1	*PCBF120N80M1(-A)	PCW120N80M1(-A)	PCZ120N80M1(-A)

* Coming soon (-A : Automotive Grade)

650V eSiC MOSFET

Solar | Server / Telecom | UPS | EV Charger | xEV(OBC)

PACKAGE / $R_{DS(ON)_typ}$	Die	D2PAK 7L	TO-247 3L	TO-247 4L
18mΩ	*PC065N18M1	*PCBF65N18M1(-A)	*PCW65N18M1(-A)	*PCZ65N18M1(-A)
27mΩ	*PC065N27M1	*PCBF65N27M1(-A)	*PCW65N27M1(-A)	*PCZ65N27M1(-A)
48mΩ	*PC065N48M1	*PCBF65N48M1(-A)	*PCW65N48M1(-A)	*PCZ65N48M1(-A)
72mΩ	*PC065N72M1	*PCBF65N72M1(-A)	*PCW65N72M1(-A)	*PCZ65N72M1(-A)
107mΩ	*PC065N107M1	*PCBF65N107M1(-A)	*PCW65N107M1(-A)	*PCZ65N107M1(-A)

* Coming soon (-A : Automotive Grade)

eSiC MOSFET Nomenclature

P C W 120 N 60 M1 - A

- **MOSFET / Grade**
  - - A : Automotive Grade
  - None : Industrial Grade
- **MOSFET / Generation**
  - M1 : The 1st Gen.
  - M1R: The 1st Gen. of High Ruggedness
  - M2 : The 2nd Gen.
- **$R_{DS(ON)}$ Typ [mΩ]**
- **Channel Polarity**
- **Voltage Rating (x10)**
- **Package**
  - B : D2-PAK 2L
  - BF : D2-PAK 7L
  - W : TO-247 3L
  - Z : TO-247 4L
  - P : TO-220 3L
  - O : Wafer (Unsawn)
  - OS : Wafer (sawn)
- **SiC Technology**
- **Power Master Semiconductor**

eSiC DIODE

– MPS (MERGED PiN SCHOTTKY) TECHNOLOGY

Power Master Semiconductor's newly developed Silicon Carbide MPS Diode, eSiC diode, combines the best features of both Schottky and PiN diodes to obtain low on-state voltage drop, low leakage in the off-state and excellent surge capability.

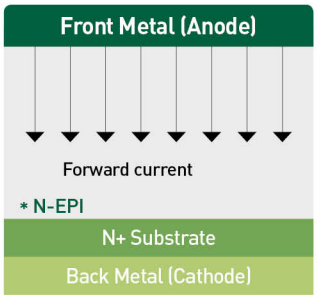

Pure Schottky Diode

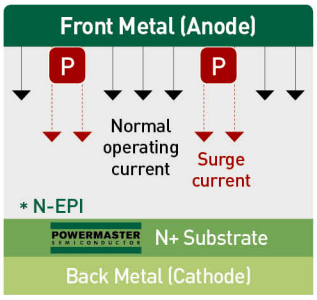

MPS(Merged PiN Schottky) Diode

MPS Diode advantage

- High current capability
- Low I_R (leakage current)

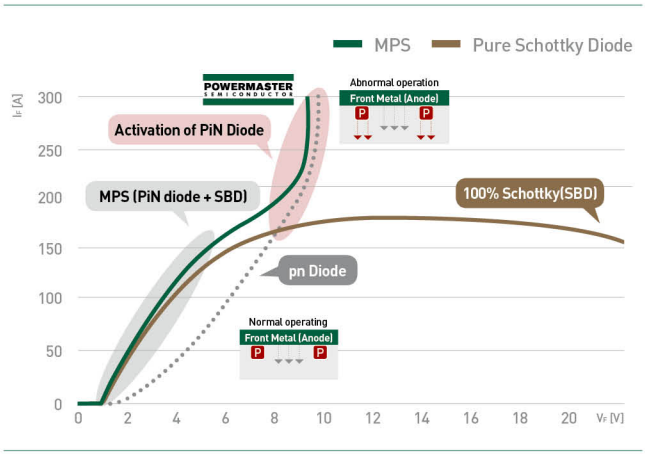

Forward Surge Capability , I_{FSM}

eSiC DIODE SERIES

– Low Q_C VERSION & Low V_F VERSION

Power Master Semiconductor's advanced eSiC Diode technology combines the benefits of excellent low forward voltage and high ruggedness for applications requiring high efficiency and reliability.

Telecom / Server (w.UPS)

Solar Inverter

TV&LED lighting

EV Charging Station

Solar Inverter

Industrial Motors

eSiC Low Q_C Version for high frequency application

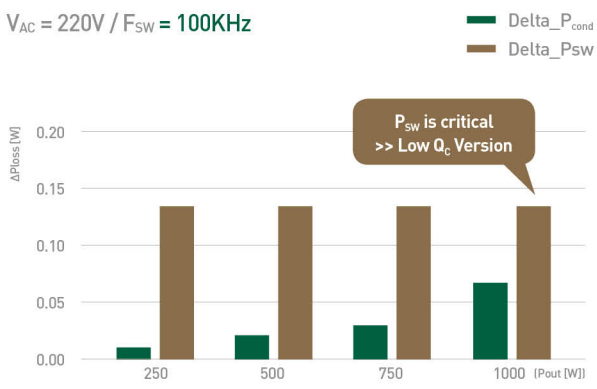

$V_{F_typ.}$=1.4V / Q_C=32nC

eSiC Low V_F Version for low frequency application

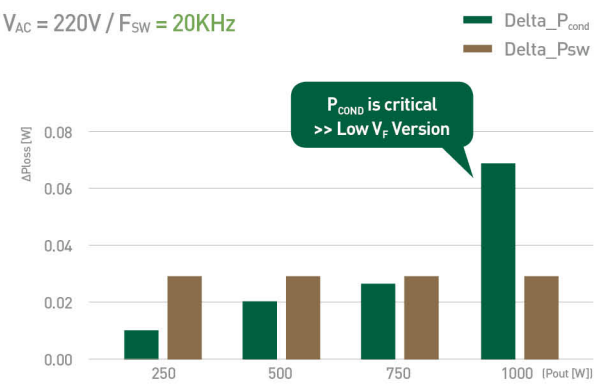

$V_{F_typ.}$=1.3V / Q_C=39nC

650V / 1200V / 1700V *e*SiC DIODE

650V *e*SiC Diode

TV | LED Lighting | Server / Telecom | Solar | UPS | EV Charger | Industrial Motor

	PACKAGE / I_F	Die	DPAK	D2PAK	PQFN88	TO-220F 2L	TO-220 2L	TO-247 2L	TO-247 3L
Low V_F FOR LOW FREQ. APPLICATIONS	40A								PCW65D40D1
	30A								PCW65D30D1
	20A	PCO65S20D1		PCB65S20D1		PCF65S20D1	PCH65S20D1	PCA65S20D1	PCW65D20D1
	16A	PCO65S16D1					PCH65S16D1		PCW65D16D1
	12A	PCO65S12D1			*PCL65S12D1	PCF65S12D1	PCH65S12D1		
	10A	PCO65S10D1	PCD65S10D1	PCB65S10D1		PCF65S10D1	PCH65S10D1		
	8A	PCO65S08D1		PCB65S08D1		PCF65S08D1	PCH65S08D1		
	6A	PCO65S06D1				PCF65S06D1	PCH65S06D1		
	4A	PCO65S04D1				PCF65S04D1	PCH65S04D1		
Low Q_C FOR HIGH FREQ. APPLICATIONS	40A								PCW65D40D1Q
	30A								PCW65D30D1Q
	20A	PCO65S20D1Q		PCB65S20D1Q		PCF65S20D1Q	PCH65S20D1Q	PCA65S20D1Q	PCW65D20D1Q
	16A	PCO65S16D1Q					PCH65S16D1Q		PCW65D16D1Q
	12A	PCO65S12D1Q		PCB65S12D1Q		PCF65S12D1Q	PCH65S12D1Q		
	10A	PCO65S10D1Q				PCF65S10D1Q	PCH65S10D1Q		
	8A	PCO65S08D1Q				PCF65S08D1Q	PCH65S08D1Q		
	6A	PCO65S06D1Q				PCF65S06D1Q	PCH65S06D1Q		

* Coming soon

1200V / 1700V *e*SiC Diode

Solar | UPS | EV Charger | Industrial Motor

	PACKAGE / I_F	Die	D2PAK	TO-220 2L	TO-247 2L	TO-247 3L
1200V	40A	PCO120S40D1			PCA120S40D1	PCW120D40D1
	30A	PCO120S30D1			PCA120S30D1 PCA120S30D1Q	PCW120D30D1
	20A	PCO120S20D1	PCB120S20D1	PCH120S20D1	PCA120S20D1	PCW120D20D1
	15A	PCO120S15D1		PCH120S15D1	PCA120S15D1	PCW120D15D1
	10A	PCO120S10D1	PCB120S10D1	PCH120S10D1	PCA120S10D1	PCW120D10D1
	8A	PCO120S08D1		PCH120S08D1		
	5A	PCO120S05D1		PCH120S05D1		
1700V	25A	*PCO170S25D1			*PCA170S25D1	
	10A	*PCO170S10D1			*PCA170S10D1	
	5A	*PCO170S05D1			*PCA170S05D1	

* Coming soon

*e*Diode Nomenclature

P C P 120 S 20 D1Q - A

- **Diode / Product Grade**
  - - A : Automotive Grade
  - None : Industrial Grade
- **Diode / Generation**
  - D1 : The 1st Gen. (High Surge (Low V_F))
  - D1Q : The 1st Gen. (High Speed Switching (Low Q_C))
- **Current [A]**
- **S : Single Die / D : Dual Die**
- **Voltage Rating (x10)**
- **Package**
  - B : D2-PAK 2L
  - F : TO-220F 2L
  - H : TO-220 2L
  - P : TO-220 3L
  - L : PQFN88
  - D : D-PAK (Center Lead Type)
  - M : D-PAK (No Center Lead Type)
  - W : TO-247 3L
  - A : TO-247 2L
  - O : Wafer (Unsawn)
  - OS : Wafer (sawn)
- **SiC Technology**
- **Power Master Semiconductor**

*e*MOS 7 SERIES

The *e*MOS 7 series enables to offer high performance, cost-effective, and robust solution for AC / DC and DC / DC applications such as hard & soft switching with a wide range of package options.

The *e*MOS E7 is well-balanced combining ease of use with an excellent performance and a reasonable price.

Key Features	Key Benefits
• Excellent ruggedness • Good switching behavior for hard and soft switching. • Significant reduction of switching and conduction losses	• Suitable for hard and soft switching (PFC and LLC) • Ease of use and fast design-in through low ringing • Simple thermal management by low switching / conduction losses • Suitable for a wide variety of applications and power ranges

The *e*MOS F7 is well-optimized for resonant topologies with an excellent integrated body diode performance.

Key Features	Key Benefits
• Excellent body diode performance - Smaller Q_{RR} • Improved body diode dv/dt and di/dt ruggedness • Lower E_{DYN}	• Suitable for soft switching (LLC) • Highest reliability for resonant topologies • High light load efficiency. • Suitable for a wide variety of applications and power ranges

*e*MOS E7 & F7
– TARGET TOPOLOGIES

PFC (Hard Switching)

Hard/Soft Switching Topologies

- Optimized performance between efficiency & easy of use
- Low EMI noise, optimized gate & drain ringing
- Rugged Body diode
- Internal R_G & optimized capacitances
- Typ. V_{TH}=3.5V

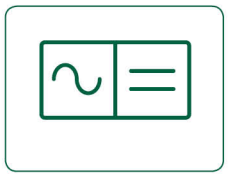

Low EMI / Easy to design

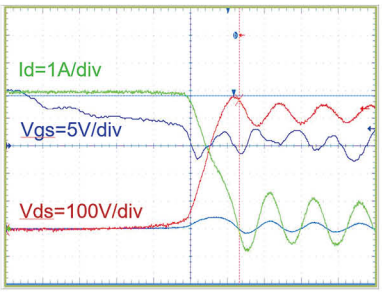

*e*MOS E7 by optimizing charge balance of pillar

LLC / ZVS (DC-DC) (Soft Switching)

Soft Switching Topologies

- Robust diode ruggedness
- Smaller Q_{RR} for lower spikes
- Better system reliability
- Reduced E_{DYN}
- Typ. V_{TH}=4V

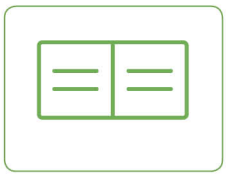

High Performance

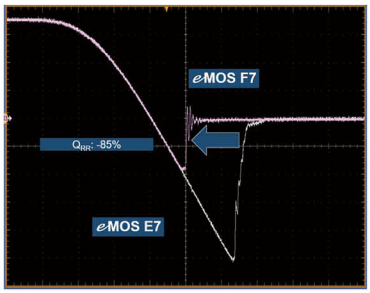

*e*MOS F7 by controlling carrier lifetime

600V / 650V *e*MOS

*e*MOS E7 (Efficient Drive) for PFC & LLC Topologies

Adaptor | ATX Power | Class-D Audio | TV / LED Lighting | Solar | Server / Telecom | UPS | EV Charger | xEV(OBC)

	PACKAGE / $R_{DS(ON)_max}$	Die	DPAK	PQFN88	TO-220	TO-220F	TO-247 3L
600V	28mΩ	PMO60N028E7(-A)					PMW60N028E7(-A)
	40mΩ	PMO60N040E7(-A)					PMW60N040E7(-A)
	70mΩ	PMO60N070E7(-A)					PMW60N070E7(-A)
	99mΩ	PMO60N099E7(-A)		*PML60N105E7(-A)	PMP60N099E7(-A)	PMF60N099E7(-A)	PMW60N099E7(-A)
	120mΩ						
	180mΩ	PMO60N180E7(-A)			PMP60N180E7(-A)	PMF60N180E7(-A)	
	280mΩ	PMO60N280E7(-A)	PMD60N280E7(-A)		PMP60N280E7(-A)	PMF60N280E7(-A)	
	380mΩ	PMO60N380E7(-A)	PMD60N380E7(-A)		PMP60N380E7(-A)	PMF60N380E7(-A)	
	600mΩ	PMO60N600E7(-A)	PMD60N600E7(-A)			PMF60N600E7(-A)	
650V	180mΩ	PMO65N180E7					
	280mΩ	PMO65N280E7					
	380mΩ	PMO65N380E7					
	1200mΩ	PMO65N1200E7					

* Coming soon (-A : Automotive Grade)

*e*MOS F7 (FRFET) for LLC & Bridge Topologies

TV / LED Lighting | Solar | Server / Telecom | UPS | EV Charger | xEV(OBC)

	PACKAGE / $R_{DS(ON)_max}$	Die	DPAK	PQFN88	TO-220	TO-220F	TO-247 3L
600V	30mΩ	PMO60N030F7					PMW60N030F7(-A)
	43mΩ	PMO60N043F7					PMW60N043F7(-A)
	75mΩ	PMO60N075F7					PMW60N075F7(-A)
	105mΩ	PMO60N105F7					PMW60N105F7(-A)
	193mΩ	PMO60N193F7					
650V	43mΩ	*PMO65N043F7					*PMW65N043F7(-A)
	310mΩ	*PMO65N310F7				*PMF65N310F7(-A)	

* Coming soon (-A : Automotive Grade)

*e*MOS Nomenclature

P M P 60 N 180 E 7 Z - A

- **MOSFET / Grade**
  - - A : Automotive Grade
  - None : Industrial Grade
- **Zener Diode**
- **Generation**
- **Switching Characteristic**
  - E : Efficient
  - F : FRFET
  - UF : Ultra FRFET
  - H : High Efficiency
- **$R_{DS(ON)}$ Max [mΩ]**
- **Channel Polarity**
- **Voltage Rating (x10)**
- **Package**
  - A : TO-3P
  - B : D2-PAK
  - D : D-PAK
  - E : ISOTOP
  - F : TO-220F
  - FN : Narrow lead
  - FW : Wide pitch
  - I : I2-PAK
  - L : PQFN88
  - N : SOT-223
  - P : TO-220
  - T : TOLL
  - U : I-PAK
  - W : TO-247
  - Z : TO-247 4L
  - S : PQFN56
  - O : Wafer (Unsawn)
  - OS : Wafer (sawn)
- **Super Junction MOSFET Technology**
- **Power Master Semiconductor**

60V / 100V eMOS

60V eMOS

Power Tool | Motor Drive | Class-D Audio | TV / LED Lighting | Micro Solar / Optimizer | Server / Telecom | Telecom Brick

PKG / $R_{DS(ON)}$	PQFN33	PQFN56	PQFN Leaded	PQFN88	PQFN88 DC	DPAK	D2PAK 7L	TOLL
0.6mΩ			*PSG06N0P6(L)G1	*PSL06N0P6(L)G1	*PSLD06N0P6G1			
0.8mΩ							*PSBF06N0P8G1	
1.0mΩ			*PSG06N1(L)G1	*PSL06N1(L)G1			*PSBF06N1G1	
1.2mΩ		*PSS06N1P2(L)G1						
1.5mΩ		*PSS06N1P5(L)G1					*PSBF06N1P5G1	
1.8mΩ		*PSS06N1P8LG1						
2.0mΩ							*PSBF06N2G1	
2.5mΩ		*PSS06N2P5LG1				*PSD06N2P5LG1	*PSBF06N2P5G1	
3.0mΩ		*PSS06N3LG1						
4.0mΩ		*PSS06N4LG1				*PSD06N4LG1		
4.5mΩ		*PSS06N4P5(L)G1						
6.0mΩ		*PSS06N6LG1						
6.5mΩ	*PSC06N6P5LG1							
7.0mΩ		*PSS06N7LG1						
9.0mΩ	*PSC06N9LG1	*PSS06N9LG1				*PSD06N9LG1		
10mΩ		*PSS06N10LG1						
16mΩ						*PSD06N16LG1		
27mΩ						*PSD06N27LG1		

* Coming soon

100V eMOS

Power Tool | Motor Drive | Class-D Audio | TV / LED Lighting | Micro Solar / Optimizer | Server / Telecom | Telecom Brick

PKG / $R_{DS(ON)}$	PQFN33	PQFN56	PQFN Leaded	PQFN88	PQFN88 DC	DPAK	D2PAK	D2PAK 7L	TO-220F	TO-220	TOLL
1.6mΩ			*PSG10N1P6G1	*PSL10N1P6G1	*PSLD10N1P6G1			*PSBF10N1P6G1			
2.0mΩ			*PSG10N2G1	*PSL10N2G1	*PSLD10N2G1		*PSB10N2G1				
2.3mΩ									*PSF10N2P3G1	*PSP10N2P3G1	
2.5mΩ		*PSS10N2P5G1	*PSG10N2P5G1	*PSL10N2P5G1	*PSLD10N2P5G1		*PSB10N2P5G1	*PSBF10N2P5G1		*PSP10N2P5G1	
3.0mΩ			*PSG10N3G1	*PSL10N3G1	*PSLD10N3G1			*PSBF10N3G1		*PSP10N3G1	
3.2mΩ		*PSS10N3P2G1	*PSG10N3P2G1	*PSL10N3P2G1			*PSB10N3P2G1	*PSBF10N3P2G1		*PSP10N3P2G1	
4.0mΩ		*PSS10N4G1	*PSG10N4G1	*PSL10N4G1				*PSBF10N4(L)G1		*PSP10N4G1	
4.5mΩ		*PSS10N4P5G1					*PSB10N4P5G1		*PSF10N4P5G1	*PSP10N4P5G1	
5.0mΩ		*PSS10N5G1	*PSG10N5G1	*PSL10N5G1		*PSD10N5G1				*PSP10N5G1	
6.0mΩ		*PSS10N6G1					*PSB10N6G1			*PSP10N6G1	
7.2mΩ	*PSC10N7P2G1	*PSS10N7P2G1									
8.5mΩ	*PSC10N8P5G1	*PSS10N8P5G1							*PSF10N8P5G1	*PSP10N8P5G1	
9.0mΩ	*PSC10N9(L)G1	*PSS10N9G1				*PSD10N9G1	*PSB10N9G1				
13mΩ	*PSC10N13G1	*PSS10N13G1				*PSD10N13(L)G1	*PSB10N13G1			*PSP10N13G1	
19mΩ	*PSC10N19G1	*PSS10N19G1									
23mΩ	*PSC10N23LZG1	*PSS10N23LZG1				*PSD10N23LZG1	*PSB10N23LZG1				
34mΩ	*PSC10N34ZG1	*PSS10N34ZG1									
56mΩ	*PSC10N56ZG1	*PSS10N56ZG1									

* Coming soon

150V / 200V eMOS

150V eMOS

Power Tool | Motor Drive | Class-D Audio | TV / LED Lighting | Micro Solar / Optimizer | Server / Telecom | Telecom Brick | BMS | xEV(DC-DC)

PKG / $R_{DS(ON)}$	PQFN33	PQFN56	PQFN Leaded	PQFN88	PQFN88 DC	DPAK	D2PAK	D2PAK 7L	TO-220F	TO-220	TO-247
4.3mΩ			*PSG15N4P3G1	*PSL15N4P3G1	*PSLD15N4P3G1						
4.5mΩ								*PSBF15N4P5G1			
5.0mΩ							*PSB15N5G1			*PSP15N5G1	
6.0mΩ			*PSG15N6G1	*PSL15N6G1							*PSW15N6G1
6.5mΩ			*PSG15N6P5G1		*PSLD15N6P5G1			*PSBF15N6P5G1			
7.0mΩ								*PSBF15N7G1			
7.5mΩ		*PSS15N7P5G1					*PSB15N7P5G1			*PSP15N7P5G1	
8.2mΩ							*PSB15N8P2G1			*PSP15N8P2G1	
8.8mΩ		*PSS15N8P8G1	*PSG15N8P8G1		*PSLD15N8P8G1						
11mΩ		*PSS15N11G1					*PSB15N11G1			*PSP15N11G1	
12.5mΩ		*PSS15N12P5G1									
15mΩ		*PSS15N15G1									
18mΩ		*PSS15N18G1							*PSF15N19G1		
22mΩ	*PSC15N22G1	*PSS15N22G1				*PSD15N22G1					
25mΩ		*PSS15N25G1									
34mΩ	*PSC15N34G1	*PSS15N34G1									
39mΩ						*PSD15N39G1	*PSB15N39G1		*PSF15N39G1		
42mΩ						*PSD15N42LZG1					
51mΩ	*PSC15N51G1	*PSS15N51G1				*PSD15N51G1					
56mΩ		*PSS15N56LG1									
77mΩ						*PSD15N77G1			*PSF15N77G1		
90mΩ	*PSC15N90G1										
134mΩ	*PSC15N134G1										

200V eMOS

9.7mΩ											*PSW20N9G7

* Coming soon

MV eMOS Nomenclature

P M P 10 N 4P5 L Z G1 - A

- **MOSFET / Grade**
  - A : Automotive Grade
  - None : Industrial Grade
- **Generation**
- **Zener Diode**
- **Specific Characteristic**
  - L : Logic Level
  - W : Wide SOA
  - F : Fast Recovery Diode
- **$R_{DS(ON)}$ Max [mΩ], P : Point**
- **N : N Channel, P : P Channel**
- **Voltage Rating (x10)**
- **Package**
  - A : TO-3P
  - B : D2-PAK
  - BF : D2-PAK 7L
  - D : D-PAK
  - F : TO-220F
  - FN : Narrow lead
  - C : PQFN33
  - FW : Wide pitch
  - I : I2-PAK
  - L : PQFN88
  - LD : PQFN88 Dual Cool
  - N : SOT-223
  - P : TO-220
  - T : TOLL
  - U : I-PAK
  - W : TO-247
  - Z : TO-247 4L
  - S : PQFN56
  - SD : PQFN56 Dual Cool
  - G : PQFN Leaded
  - O : Wafer (Unsawn)
  - OS : Wafer (sawn)
- **Si MOSFET Technology**
- **Power Master Semiconductor**

PACKAGE OUTLINE

DPAK

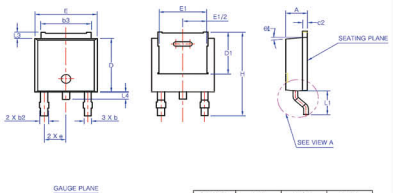

SYMBOL	MIN	NOM	MAX
A	2.20	2.30	2.40
A1 (▼)	0.00	–	0.127
b	0.66	0.76	0.86
b2	–	–	0.96
b3	5.04	5.34	5.64
c2	0.40	0.50	0.60
D	5.90	6.10	6.30
D1		(4.75)	
E	6.40	6.60	6.80
E1		(5.04)	
e		2.30 BSC	
H	9.20	9.50	9.80
L	1.27	1.47	1.67
L1	2.50	2.70	2.90
L2		0.508 BSC	
L3	0.50	0.70	0.90
L4	0.60	0.80	1.00
θ	0°	–	10°
θ1		(5°)	

D2PAK

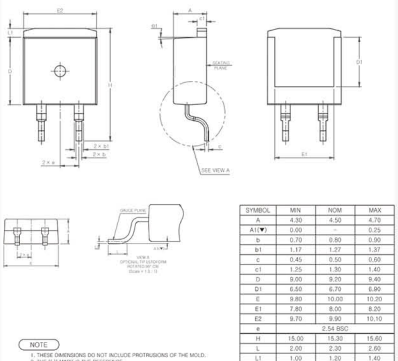

NOTE
1. THESE DIMENSIONS DO NOT INCLUDE PROTRUSIONS OF THE MOLD.
2. THE "1" MARK IS THE REFERENCE
3. COPLANARITY : MAX. 0.10mm

SYMBOL	MIN	NOM	MAX
A	4.30	4.50	4.70
A1	0.00	–	0.25
b	0.70	0.80	0.90
b1	1.17	1.27	1.37
c	0.45	0.50	0.60
c1	1.25	1.30	1.40
D	9.00	9.20	9.40
D1	6.50	6.70	6.90
E	9.80	10.00	10.20
E1	7.80	8.00	8.20
E2	9.70	9.90	10.10
e		2.54 BSC	
H	15.00	15.30	15.60
L	2.00	2.30	2.60
L1	1.00	1.20	1.40
L3		0.254 BSC	
θ1		(3°)	

TO-220-2L

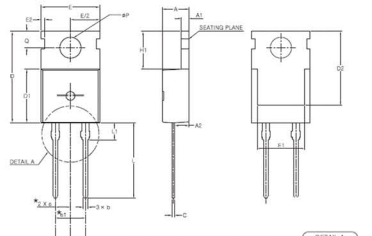

SYMBOL	MIN	NOM	MAX
A	4.30	4.50	4.70
A1	1.25	1.30	1.40
A2	2.20	2.40	2.60
b	0.70	0.80	0.90
b1	1.42	1.52	1.62
b2	1.17	1.27	1.37
c	0.45	0.50	0.60
D	15.50	15.70	15.90
D1	9.00	9.20	9.40
D2		(12.70)	
E	9.70	9.90	10.10
E1		(8.00)	
E2		(0.63)	
E3	9.70	9.90	10.10
e		2.54 BSC	
e1		5.08 BSC	
H1	6.30	6.50	6.70
L	12.88	13.08	13.28
L1		(3.00)	
øP	3.50	3.60	3.70
Q	2.70	2.80	2.90

TO-220F-2L

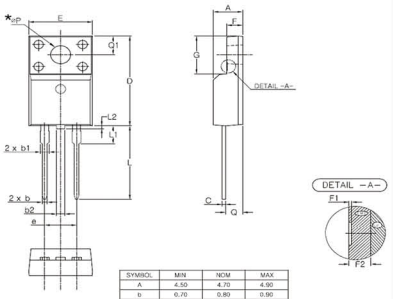

SYMBOL	MIN	NOM	MAX
A	4.50	4.70	4.90
b	0.70	0.80	0.90
b1	1.33	1.40	1.47
b2	0.98	1.28	1.58
C	0.45	0.50	0.60
D	15.67	15.87	16.07
E	9.96	10.16	10.36
e		5.08 BSC	
F	2.34	2.54	2.74
F1	–	–	0.50
F2		(0.74)	
G	6.48	6.58	6.88
L	12.78	12.98	13.18
L1	2.98	3.18	3.38
L2	–	–	0.80
Q	2.56	2.76	2.96
Q1	3.10	3.30	3.50
* øP	3.08	3.18	3.28

TO-220-3L

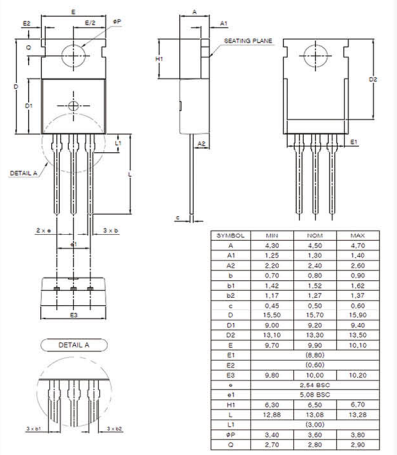

SYMBOL	MIN	NOM	MAX
A	4.30	4.50	4.70
A1	1.25	1.30	1.40
A2	2.20	2.40	2.60
b	0.70	0.80	0.90
b1	1.42	1.52	1.62
b2	1.17	1.27	1.37
c	0.45	0.50	0.60
D	15.50	15.70	15.90
D1	9.00	9.20	9.40
D2	13.10	13.30	13.50
E	9.70	9.90	10.10
E1		(8.80)	
E2		(0.60)	
E3	9.80	10.00	10.20
e		2.54 BSC	
e1		5.08 BSC	
H1	6.30	6.50	6.70
L	12.88	13.08	13.28
L1		(3.00)	
øP	3.40	3.60	3.80
Q	2.70	2.80	2.90

TO-220F-3L

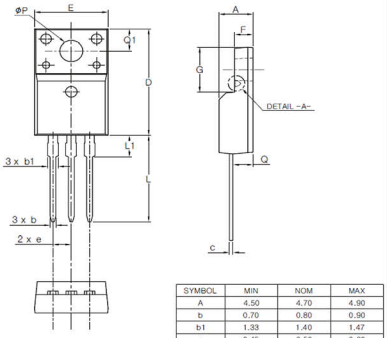

SYMBOL	MIN	NOM	MAX
A	4.50	4.70	4.90
b	0.70	0.80	0.90
b1	1.33	1.40	1.47
c	0.45	0.50	0.60
D	15.67	15.87	16.07
E	9.96	10.16	10.36
e		2.54 BSC	
F	2.34	2.54	2.74
F1		(0.10)	
F2		(0.84)	
G	6.48	6.68	6.88
L	12.78	12.98	13.18
L1	3.03	3.23	3.43
Q	2.56	2.76	2.96
Q1	3.10	3.30	3.50
øP	3.08	3.18	3.28

TO-247-2L

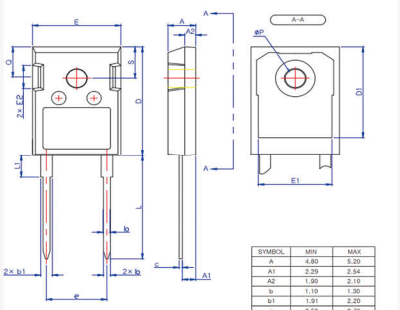

SYMBOL	MIN	MAX
A	4.80	5.20
A1	2.29	2.54
A2	1.90	2.10
b	1.19	1.30
b1	1.91	2.20
c	0.50	0.70
D	20.80	21.34
D1	17.43	17.83
E	15.75	16.13
E1	13.06	13.46
E2	4.32	4.83
e	10.90 BSC	
L	19.85	20.25
L1	–	4.49
øP	3.55	3.65
Q	5.59	6.19
S	6.15 BSC	

TO-247-3L

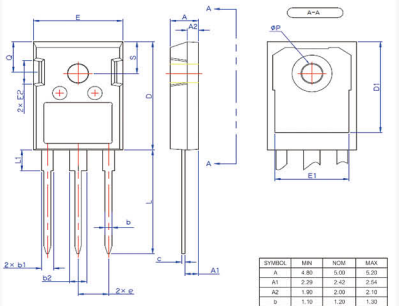

SYMBOL	MIN	NOM	MAX
A	4.80	5.00	5.20
A1	2.29	2.42	2.54
A2	1.90	2.00	2.10
b	1.19	1.20	1.30
b1	1.91	2.00	2.20
b2	2.92	3.06	3.20
c	0.50	0.60	0.70
D	20.80	21.07	21.34
D1	17.43	17.63	17.83
E	15.75	15.94	16.13
E1	13.06	13.26	13.46
E2	4.32	4.58	4.83
e	5.45 BSC		
L	19.85	20.05	20.25
L1	4.05	4.27	4.49
øP	3.55	3.60	3.65
Q	5.59	5.89	6.19
S	6.15 BSC		

TO-247-4L

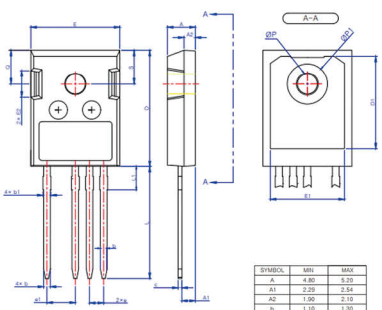

SYMBOL	MIN	MAX
A	4.80	5.20
A1	2.29	2.54
A2	1.90	2.10
b	1.19	1.30
b1	1.20	1.50
c	0.50	0.70
D	20.80	21.10
D1	17.43	17.63
E	15.75	16.13
E1	13.06	13.46
E2	4.32	4.83
e	2.54 BSC	
e1	5.08 BSC	
L	19.85	20.25
L1	–	4.49
øP	3.55	3.65
øP1	7.00	7.40
Q	5.59	6.19
S	6.15 BSC	

* Dimensions in millimeters

Target Applications

DC EV CHARGING (≤ 30kW)

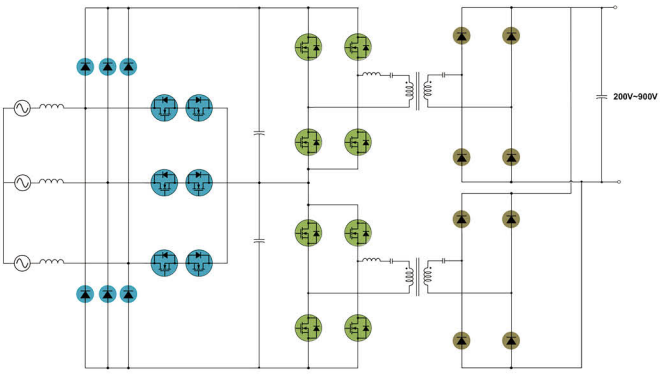

Vienna Rectifier +Series FB LLC

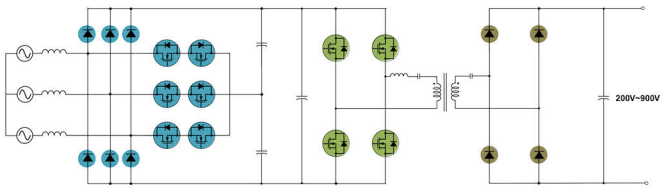

Vienna Rectifier +FB LLC

Vienna Rectifier - Recommended Products		
eMOS E7/F7	PMW60N028E7	600V / 28mΩ, TO-247
	PMW60N040E7	600V / 40mΩ, TO-247
	PMW60N030F7	600V / 30mΩ, TO-247
	PMW60N043F7	600V / 43mΩ, TO-247
	*PMW65N043F7	650V / 43mΩ, TO-247
eSiC Diode	PCA120S(D)20D1	1200V / 20A, TO-247-2/3L
	PCA120S(D)30D1	1200V / 30A, TO-247-2/3L
	PCA120S(D)40D1	1200V / 40A, TO-247-2/3L

Series FB LLC (Primary) - Recommended Products		
eMOS F7	PMW60N030F7	600V / 30mΩ, TO-247
	PMW60N043F7	600V / 43mΩ, TO-247
	*PMW65N043F7	650V / 43mΩ, TO-247
	PMW60N075F7	600V / 75mΩ, TO-247
FB LLC (Primary) - Recommended Products		
eSiC MOSFET	*PCW120N21M1	1200V / 21mΩ, TO-247-3L
	*PCW120N30M1	1200V / 30mΩ, TO-247-3L
	*PCW120N40M1	1200V / 40mΩ, TO-247-3L
	*PCW120N60M1	1200V / 60mΩ, TO-247-3L
	PCW120N80M1	1200V / 80mΩ, TO-247-3L
	*PCZ120N21M1	1200V / 21mΩ, TO-247-4L
	*PCZ120N30M1	1200V / 30mΩ, TO-247-4L
	*PCZ120N40M1	1200V / 40mΩ, TO-247-4L
	*PCZ120N60M1	1200V / 60mΩ, TO-247-4L
	PCZ120N80M1	1200V / 80mΩ, TO-247-4L

Series FB LLC (Secondary) - Recommended Products		
eSiC Diode	PCA120S20D1	1200V / 20A, TO-247-2L
	PCA120S30D1	1200V / 30A, TO-247-2L
	PCA120S40D1	1200V / 40A, TO-247-2L
	PCW120D20D1	1200V / 20A, TO-247-3L
	PCW120D30D1	1200V / 30A, TO-247-3L
	PCW120D40D1	1200V / 40A, TO-247-3L

* Coming soon

DC EV CHARGING (≥ 30kW)

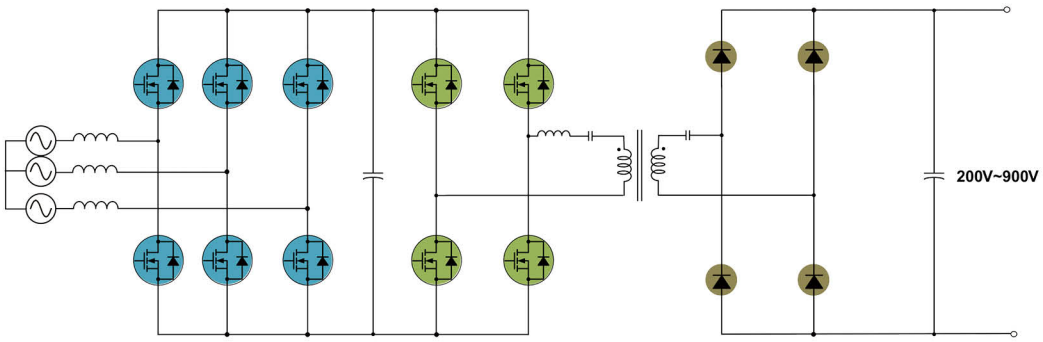

Three-phase FB (B6) Rectifier - Recommended Products		
eSiC MOSFET	*PCW120N21M1	1200V / 21mΩ, TO-247-3L
	*PCW120N30M1	1200V / 30mΩ, TO-247-3L
	*PCW120N40M1	1200V / 40mΩ, TO-247-3L
	*PCW120N60M1	1200V / 60mΩ, TO-247-3L
	PCW120N80M1	1200V / 80mΩ, TO-247-3L
	*PCZ120N21M1	1200V / 21mΩ, TO-247-4L
	*PCZ120N30M1	1200V / 30mΩ, TO-247-4L
	*PCZ120N40M1	1200V / 40mΩ, TO-247-4L
	*PCZ120N60M1	1200V / 60mΩ, TO-247-4L
	PCZ120N80M1	1200V / 80mΩ, TO-247-4L

FB LLC (Primary) - Recommended Products		
eSiC MOSFET	*PCW120N21M1	1200V / 21mΩ, TO-247-3L
	*PCW120N30M1	1200V / 30mΩ, TO-247-3L
	*PCW120N40M1	1200V / 40mΩ, TO-247-3L
	*PCW120N60M1	1200V / 60mΩ, TO-247-3L
	PCW120N80M1	1200V / 80mΩ, TO-247-3L
	*PCZ120N21M1	1200V / 21mΩ, TO-247-4L
	*PCZ120N30M1	1200V / 30mΩ, TO-247-4L
	*PCZ120N40M1	1200V / 40mΩ, TO-247-4L
	*PCZ120N60M1	1200V / 60mΩ, TO-247-4L
	PCZ120N80M1	1200V / 80mΩ, TO-247-4L

FB LLC (Secondary) - Recommended Products		
eSiC Diode	PCA120S20D1	1200V / 20A, TO-247-2L
	PCA120S30D1	1200V / 30A, TO-247-2L
	PCA120S40D1	1200V / 40A, TO-247-2L
	PCW120D20D1	1200V / 20A, TO-247-3L
	PCW120D30D1	1200V / 30A, TO-247-3L
	PCW120D40D1	1200V / 40A, TO-247-3L

* Coming soon

OBC (Single Phase / 400V Battery)

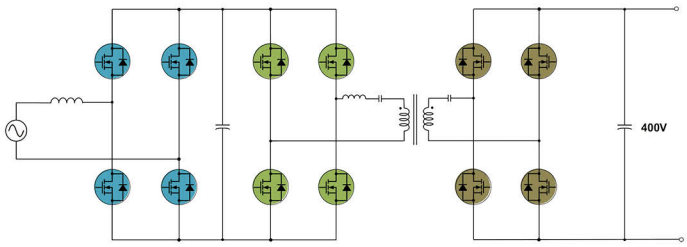

Bi-Directional

Totem-Pole PFC - Recommended Products		
eSiC MOSFET (FAST Leg)	*PCZ65N18M1-A	650V / 18mΩ, TO-247-4L
	*PCZ65N27M1-A	650V / 27mΩ, TO-247-4L
	*PCZ65N48M1-A	650V / 48mΩ, TO-247-4L
	*PCBF65N18M1-A	650V / 18mΩ, D2PAK-7L
	*PCBF65N27M1-A	650V / 27mΩ, D2PAK-7L
	*PCBF65N48M1-A	650V / 48mΩ, D2PAK-7L
eMOS E7/F7 (Slow Leg)	PMW60N028E7-A	600V / 28mΩ, TO-247
	PMW60N040E7-A	600V / 40mΩ, TO-247
	PMW60N070E7-A	600V / 70mΩ, TO-247
	PMW60N030F7-A	600V / 30mΩ, TO-247
	PMW60N043F7-A	600V / 43mΩ, TO-247
	*PMW65N043F7-A	650V / 43mΩ, TO-247
	PMW60N075F7-A	600V / 75mΩ, TO-247

CLLC (Primary) - Recommended Products		
eSiC MOSFET	*PCZ65N18M1-A	650V / 18mΩ, TO-247-4L
	*PCZ65N27M1-A	650V / 27mΩ, TO-247-4L
	*PCZ65N48M1-A	650V / 48mΩ, TO-247-4L
	*PCBF65N18M1-A	650V / 18mΩ, D2PAK-7L
	*PCBF65N27M1-A	650V / 27mΩ, D2PAK-7L
	*PCBF65N48M1-A	650V / 48mΩ, D2PAK-7L
eMOS F7	PMW60N030F7-A	600V / 30mΩ, TO-247
	PMW60N043F7-A	600V / 43mΩ, TO-247
	*PMW65N043F7-A	650V / 43mΩ, TO-247
	PMW60N075F7-A	600V / 75mΩ, TO-247

CLLC (Secondary) - Recommended Products		
eSiC MOSFET	*PCZ65N18M1-A	650V / 18mΩ, TO-247-4L
	*PCZ65N27M1-A	650V / 27mΩ, TO-247-4L
	*PCZ65N48M1-A	650V / 48mΩ, TO-247-4L
	*PCBF65N18M1-A	650V / 18mΩ, D2PAK-7L
	*PCBF65N27M1-A	650V / 27mΩ, D2PAK-7L
	*PCBF65N48M1-A	650V / 48mΩ, D2PAK-7L

* Coming soon

OBC (Three Phase / 800V Battery)

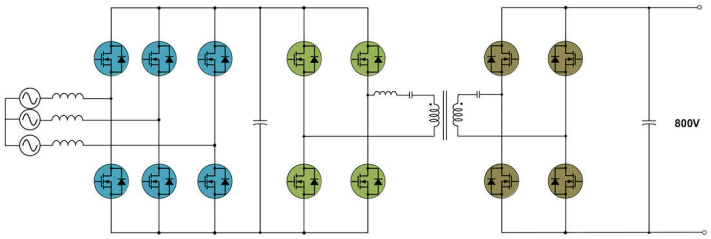

Bi-Directional

Three-phase FB (B6) Rectifier - Recommended Products		
eSiC MOSFET	*PCZ120N21M1-A	1200V / 21mΩ, TO-247-4L
	*PCZ120N30M1-A	1200V / 30mΩ, TO-247-4L
	*PCZ120N40M1-A	1200V / 40mΩ, TO-247-4L
	*PCZ120N60M1-A	1200V / 60mΩ, TO-247-4L
	PCZ120N80M1-A	1200V / 80mΩ, TO-247-4L
	*PCBF120N21M1-A	1200V / 21mΩ, D2PAK-7L
	*PCBF120N30M1-A	1200V / 30mΩ, D2PAK-7L
	*PCBF120N40M1-A	1200V / 40mΩ, D2PAK-7L
	*PCBF120N60M1-A	1200V / 60mΩ, D2PAK-7L
	*PCBF120N80M1-A	1200V / 80mΩ, D2PAK-7L

CLLC (Primary) - Recommended Products		
eSiC MOSFET	*PCZ120N21M1-A	1200V / 21mΩ, TO-247-4L
	*PCZ120N30M1-A	1200V / 30mΩ, TO-247-4L
	*PCZ120N40M1-A	1200V / 40mΩ, TO-247-4L
	*PCZ120N60M1-A	1200V / 60mΩ, TO-247-4L
	PCZ120N80M1-A	1200V / 80mΩ, TO-247-4L
	*PCBF120N21M1-A	1200V / 21mΩ, D2PAK-7L
	*PCBF120N30M1-A	1200V / 30mΩ, D2PAK-7L
	*PCBF120N40M1-A	1200V / 40mΩ, D2PAK-7L
	*PCBF120N60M1-A	1200V / 60mΩ, D2PAK-7L
	*PCBF120N80M1-A	1200V / 80mΩ, D2PAK-7L

CLLC (Secondary) - Recommended Products		
eSiC MOSFET	*PCZ120N21M1-A	1200V / 21mΩ, TO-247-4L
	*PCZ120N30M1-A	1200V / 30mΩ, TO-247-4L
	*PCZ120N40M1-A	1200V / 40mΩ, TO-247-4L
	*PCZ120N60M1-A	1200V / 60mΩ, TO-247-4L
	*PCZ120N80M1-A	1200V / 80mΩ, TO-247-4L
	*PCBF120N21M1-A	1200V / 21mΩ, D2PAK-7L
	*PCBF120N30M1-A	1200V / 30mΩ, D2PAK-7L
	*PCBF120N40M1-A	1200V / 40mΩ, D2PAK-7L
	*PCBF120N60M1-A	1200V / 60mΩ, D2PAK-7L
	*PCBF120N80M1-A	1200V / 80mΩ, D2PAK-7L

* Coming soon

HV/LV DC-DC (400V~800V Battery)

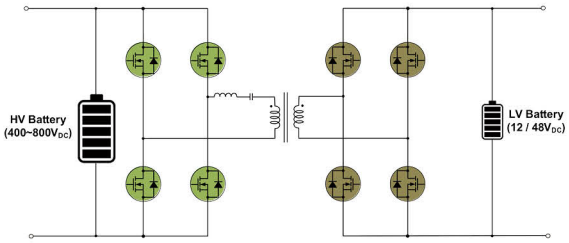

LLC (Primary) for 400VDC - Recommended Products		
eSiC MOSFET	*PCZ65N27M1-A	650V / 27mΩ, TO-247-4L
	*PCZ65N48M1-A	650V / 48mΩ, TO-247-4L
	*PCBF65N27M1-A	650V / 27mΩ, D2PAK-7L
	*PCBF65N48M1-A	650V / 48mΩ, D2PAK-7L
eMOS F7	PMW60N030F7-A	600V / 30mΩ, TO-247
	PMW60N043F7-A	600V / 43mΩ, TO-247
	*PMW65N043F7-A	650V / 43mΩ, TO-247
	PMW60N075F7-A	600V / 75mΩ, TO-247

LLC (Primary) for 800V$_{DC}$ - Recommended Products		
eSiC MOSFET	*PCZ120N21M1-A	1200V / 21mΩ, TO-247-4L
	*PCZ120N30M1-A	1200V / 30mΩ, TO-247-4L
	*PCZ120N40M1-A	1200V / 40mΩ, TO-247-4L
	*PCZ120N60M1-A	1200V / 60mΩ, TO-247-4L
	PCZ120N80M1-A	1200V / 80mΩ, TO-247-4L
	*PCBF120N21M1-A	1200V / 21mΩ, D2PAK-7L
	*PCBF120N30M1-A	1200V / 30mΩ, D2PAK-7L
	*PCBF120N40M1-A	1200V / 40mΩ, D2PAK-7L
	*PCBF120N60M1-A	1200V / 60mΩ, D2PAK-7L
	*PCBF120N80M1-A	1200V / 80mΩ, D2PAK-7L

LLC (Secondary) - Recommended Products		
60V eMOS (for 12V$_{DC}$)	*PSS06N1P2(L)G1-A	60V / 1.2mΩ, PQFN56
	*PSS06N1P8LG1-A	60V / 1.8mΩ, PQFN56
	*PSS06N2P5LG1-A	60V / 2.5mΩ, PQFN56
150V eMOS (for 48V$_{DC}$)	*PSS15N7P5G1-A	150V / 7.5mΩ, PQFN56
	*PSS15N8P8G1-A	150V / 8.8mΩ, PQFN56
	*PSS15N11G1-A	150V / 11mΩ, PQFN56

* Coming soon

SINGLE PHASE STRING INVERTER

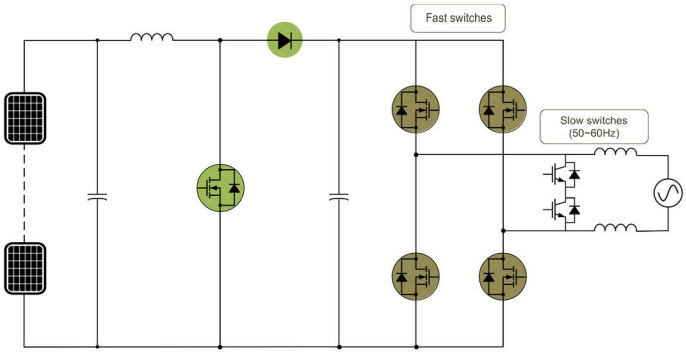

HERIC Inverter

DC-DC MPPT - Boost - Recommended Products		
*e*MOS E7/F7	PMW60N028E7	600V / 28mΩ, TO-247
	PMW60N040E7	600V / 40mΩ, TO-247
	PMW60N030F7	600V / 30mΩ, TO-247
	PMW60N043F7	600V / 43mΩ, TO-247
	*PMW65N043F7	650V / 43mΩ, TO-247
*e*SiC MOSFET	*PCZ65N27M1	650V / 27mΩ, TO-247-4L
	*PCZ65N48M1	650V / 48mΩ, TO-247-4L
	*PCW65N27M1	650V / 27mΩ, TO-247-3L
	*PCW65N48M1	650V / 48mΩ, TO-247-3L
*e*SiC Diode	PCA65S20D1	650V / 20A, TO-247 2L
	PCA65S20D1Q	650V / 20A, TO-247 2L
	PCW65D30D1	650V / 30A, TO-247 3L
	PCW65D30D1Q	650V / 30A, TO-247 3L

DC-AC HERIC Inverter - Recommended Products		
*e*SiC MOSFET	*PCZ65N27M1	650V / 27mΩ, TO-247-4L
	*PCZ65N48M1	650V / 48mΩ, TO-247-4L
	*PCW65N27M1	650V / 27mΩ, TO-247-3L
	*PCW65N48M1	650V / 48mΩ, TO-247-3L
*e*MOS F7	PMW60N030F7	600V / 30mΩ, TO-247
	PMW60N043F7	600V / 43mΩ, TO-247
	*PMW65N043F7	650V / 43mΩ, TO-247
	PMW60N075F7	600V / 75mΩ, TO-247

* Coming soon

THREE PHASE STRING INVERTER

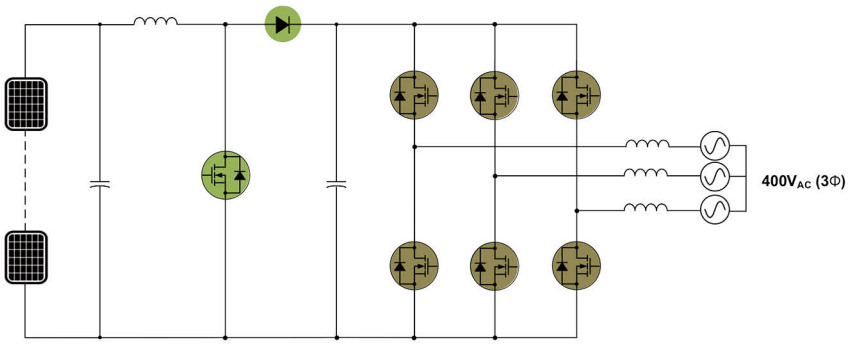

2 Level Inverter

DC-DC MPPT - Boost - Recommended Products		
*e*SiC MOSFET	*PCW120N21M1	1200V / 21mΩ, TO-247-3L
	*PCW120N30M1	1200V / 30mΩ, TO-247-3L
	*PCW120N40M1	1200V / 40mΩ, TO-247-3L
	*PCW120N60M1	1200V / 60mΩ, TO-247-3L
	PCW120N80M1	1200V / 80mΩ, TO-247-3L
	*PCZ120N21M1	1200V / 21mΩ, TO-247-4L
	*PCZ120N30M1	1200V / 30mΩ, TO-247-4L
	*PCZ120N40M1	1200V / 40mΩ, TO-247-4L
	*PCZ120N60M1	1200V / 60mΩ, TO-247-4L
	PCZ120N80M1	1200V / 80mΩ, TO-247-4L
*e*SiC Diode	PCA120S15D1	1200V / 15A, TO-247-2L
	PCA120S20D1	1200V / 20A, TO-247-2L
	PCA120S30D1	1200V / 30A, TO-247-2L
	PCA120S30D1Q	1200V / 30A, TO-247-2L
	PCA120S40D1	1200V / 40A, TO-247-2L

DC-AC 2 Level Inverter - Recommended Products		
*e*SiC MOSFET	*PCW120N21M1	1200V / 21mΩ, TO-247-3L
	*PCW120N30M1	1200V / 30mΩ, TO-247-3L
	*PCW120N40M1	1200V / 40mΩ, TO-247-3L
	*PCW120N60M1	1200V / 60mΩ, TO-247-3L
	PCW120N80M1	1200V / 80mΩ, TO-247-3L
	*PCZ120N21M1	1200V / 21mΩ, TO-247-4L
	*PCZ120N30M1	1200V / 30mΩ, TO-247-4L
	*PCZ120N40M1	1200V / 40mΩ, TO-247-4L
	*PCZ120N60M1	1200V / 60mΩ, TO-247-4L
	PCZ120N80M1	1200V / 80mΩ, TO-247-4L

* Coming soon

MICRO INVERTER

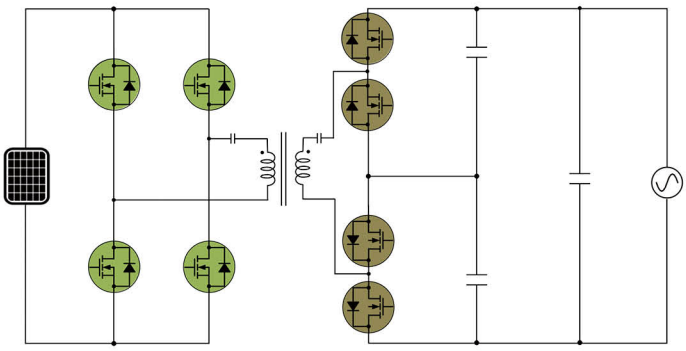

DC-AC Full Bridge + AC-AC Cyclo Converter

DC-AC Full Bridge - Recommended Products		
60V *e*MOS	*PSS06N2P5LG1	60V / 2.5mΩ, PQFN56
	*PSS06N3LG1	60V / 3.0mΩ, PQFN56
	*PSS06N4LG1	60V / 4.0mΩ, PQFN56
100V *e*MOS	*PSS10N4P5G1	100V / 4.5mΩ, PQFN56
	*PSS10N5G1	100V / 5.0mΩ, PQFN56
	*PSS10N6G1	100V / 6.0mΩ, PQFN56
	*PSS10N7P2G1	100V / 7.2mΩ, PQFN56

AC-AC Cyclo Converter - Recommended Products		
*e*MOS E7	*PML60N105E7	600V / 105mΩ, PQFN88

* Coming soon

ESS POWER CONVERSION SYSTEN (PCS) (1Φ)

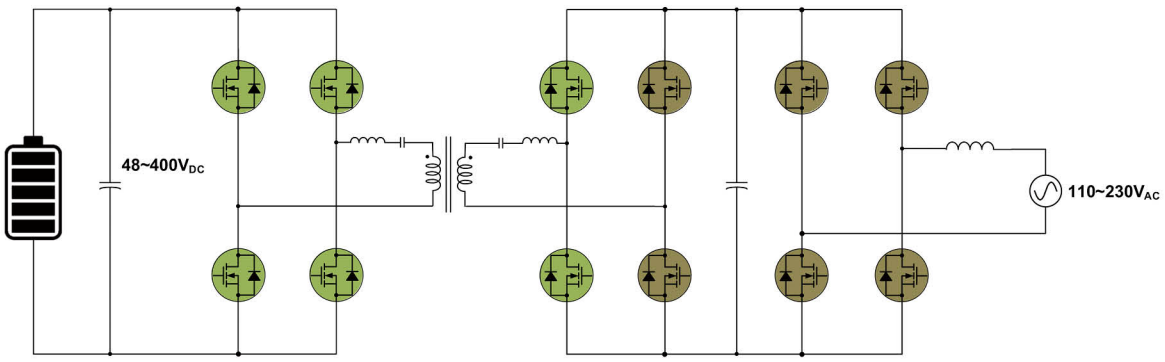

DC-DC CLLC - Recommended Products		
*e*SiC MOSFET	*PCZ65N27M1	650V / 27mΩ, TO-247-4L
	*PCZ65N48M1	650V / 48mΩ, TO-247-4L
	*PCZ65N72M1	650V / 72mΩ, TO-247-4L
*e*SiC F7	PMW60N030F7	600V / 30mΩ, TO-247
	PMW60N043F7	600V / 43mΩ, TO-247
	*PMW65N043F7	650V / 43mΩ, TO-247
	PMW60N075F7	600V / 75mΩ, TO-247
150V *e*MOS	*PSS15N7P5G1	150V / 7.5mΩ, PQFN56
	*PSS15N8P8G1	150V / 8.8mΩ, PQFN56

DC-AC Totem-pole - Recommended Products		
*e*SiC MOSFET	*PCZ65N27M1	650V / 27mΩ, TO-247-4L
	*PCZ65N48M1	650V / 48mΩ, TO-247-4L
	*PCZ65N72M1	650V / 72mΩ, TO-247-4L
*e*MOS F7	PMW60N030F7	600V / 30mΩ, TO-247
	PMW60N043F7	600V / 43mΩ, TO-247
	*PMW65N043F7	650V / 43mΩ, TO-247
	PMW60N075F7	600V / 75mΩ, TO-247

* Coming soon

SERVER / TELECOM POWER (> 1.6KW)

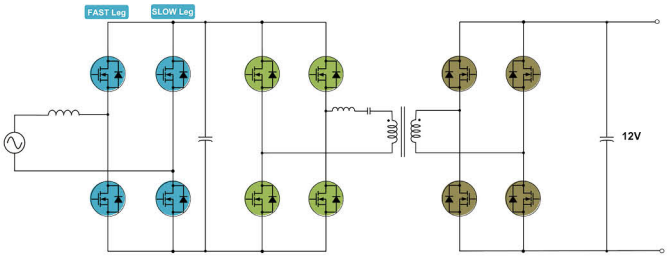

Totem-Pole PFC - Recommended Products		
eSiC MOSFET (FAST Leg)	*PCZ65N27M1	650V / 27mΩ, TO-247-4L
	*PCZ65N48M1	650V / 48mΩ, TO-247-4L
eMOS E7/F7 (SLOW Leg)	PMW60N028E7	600V / 28mΩ, TO-247
	PMW60N040E7	600V / 40mΩ, TO-247
	PMW60N030F7	600V / 30mΩ, TO-247
	PMW60N043F7	600V / 43mΩ, TO-247
	*PMW65N043F7	650V / 43mΩ, TO-247

LLC or ZVS PSFB - Recommended Products		
eSiC MOSFET	*PCZ65N27M1	650V / 27mΩ, TO-247-4L
	*PCZ65N48M1	650V / 48mΩ, TO-247-4L
	*PCZ65N72M1	650V / 72mΩ, TO-247-4L
eMOS F7	PMW60N030F7	600V / 30mΩ, TO-247
	PMW60N043F7	600V / 43mΩ, TO-247
	*PMW65N043F7	650V / 43mΩ, TO-247
	PMW60N075F7	600V / 75mΩ, TO-247

Synchronous Rectification - Recommended Products		
60V eMOS	*PSS06N1P2(L)G1	60V / 1.2mΩ, PQFN56
	*PSS06N1P8LG1	60V / 1.8mΩ, PQFN56
	*PSS06N2P5LG1	60V / 2.5mΩ, PQFN56
150V eMOS	*PSS15N7P5G1	150V / 7.5mΩ, PQFN56
	*PSS15N8P8G1	150V / 8.8mΩ, PQFN56
	*PSS15N11G1	150V / 11mΩ, PQFN56

* Coming soon

BATTERY CHARGER (150~300W)

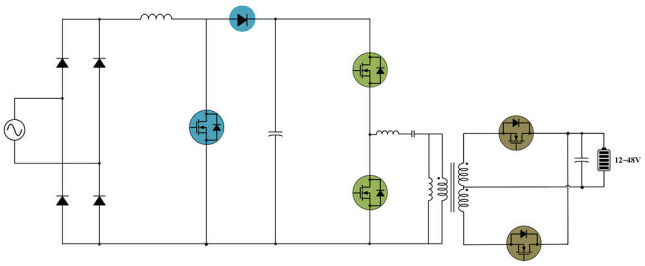

DCM PFC - Recommended Products		
eMOS E7	PMF60N180E7	600V / 180mΩ, TO-220F
	PMF60N280E7	600V / 280mΩ, TO-220F
	PMF60N380E7	600V / 380mΩ, TO-220F

FB LLC - Recommended Products		
eMOS E7	PMF60N180E7	600V / 180mΩ, TO-220F
	PMF60N280E7	600V / 280mΩ, TO-220F
	PMF60N380E7	600V / 380mΩ, TO-220F

Synchronous Rectification - Recommended Products		
100V eMOS	*PSP10N4P5G1	100V / 4.5mΩ, TO-220
	*PSP10N5G1	100V / 5.0mΩ, TO-220
	*PSB10N4P5G1	100V / 4.5mΩ, D2PAK
150V eMOS	*PSP15N5G1	150V / 5.0mΩ, TO-220
	*PSB15N5G1	150V / 5.0mΩ, D2PAK

* Coming soon

LARGE SIZE TV POWER SUPPLY (300~600W)

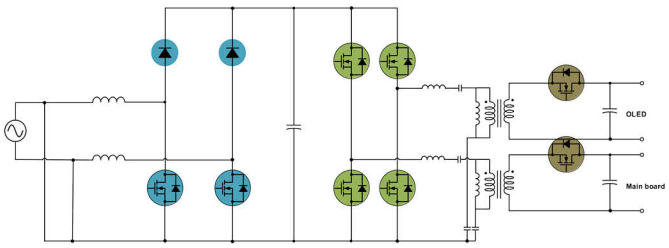

Dual Boost Bridgeless PFC - Recommended Products		
eMOS E7	PMD60N180E7	600V / 180mΩ, DPAK
	PMD60N280E7	600V / 280mΩ, DPAK
	PMD60N380E7	600V / 380mΩ, DPAK
	PMF60N099E7	600V / 99mΩ, TO-220F
	PMF60N180E7	600V / 180mΩ, TO-220F
	PMF60N280E7	600V / 280mΩ, TO-220F
	PMF60N380E7	600V / 380mΩ, TO-220F

FB LLC - Recommended Products		
eMOS E7	PMD60N180E7	600V / 180mΩ, DPAK
	PMD60N280E7	600V / 280mΩ, DPAK
	PMD60N380E7	600V / 380mΩ, DPAK
	PMF60N099E7	600V / 99mΩ, TO-220F
	PMF60N180E7	600V / 180mΩ, TO-220F
	PMF60N280E7	600V / 280mΩ, TO-220F
	PMF60N380E7	600V / 380mΩ, TO-220F

Synchronous Rectification - Recommended Products		
100V eMOS	*PSS10N3P2G1	100V / 3.2mΩ, PQFN56
	*PSS10N4P5G1	100V / 4.5mΩ, PQFN56
	*PSD10N5G1	100V / 5.0mΩ, DPAK
	*PSD10N9G1	100V / 9.0mΩ, DPAK
150V eMOS	*PSS15N7P5G1	150V / 7.5mΩ, PQFN56
	*PSS15N8P8G1	150V / 8.8mΩ, PQFN56
	*PSS15N11G1	150V / 11.0mΩ, PQFN56

* Coming soon

Power Master Semiconductor Co., Ltd

POWERMASTER
SEMICONDUCTOR
MASTERS OF POWER SOLUTION

HEADQUATERS, FACTORY

Power Master Semiconductor Corporation

Address.
79-20, Gwahaksaneop 4-ro, Oksan-myeon, Heungdeok-gu, Cheongju-si, Chungcheongbuk-do, Republic of Korea
Tel. 043-219-6850 **Fax.** 043-715-3994 **https://www.powermastersemi.com**

R&D, SALES OFFICE

Power Master Semiconductor Corporation

Address.
7F (Entech Building) 13-42 511beon-gil Sinheung-ro Bucheon-si Gyeonggi-do Republic of Korea
Tel. 070-4465-7695 **Fax.** 032-679-3999 **https://www.powermastersemi.com**

* Power Master Semiconductor
– All rights reserved